IMPULSE TURBINE

PRESENTED BY:

P. VIVEK SAGAR (19BEC0010)

TEJAS KALEKAR (20BME0698)

SUJAL SRIVASTAVA (20BME0699)

ABSTRACT

- Hydroelectric power plants are a major source of renewable electricity generation. The hydropower offered by flowing water from rivers remains unexplored and this work aims to use it.
- Device is designed with a unique and simple design, which traps the flow of energy from flowing water sources and produces the required rotary motion.
- An innovative hybrid cam is designed which automatically makes the wings change its orientation periodically and retain their original orientation making this design a Position memory Design. This makes the wing function in a unique manner which is used to develop rotary motion from the river water flow.
- The power produced by this device is eco-friendly and is a great solution for future power requirements. All the aspects of the turbine are recorded, starting from the hypothesis of working, the realisation of the 3D modelling, 3D modelling using ***Fusion 360***, theoretical power calculations, and mathematical modelling using ***simulink***.

INTRODUCTION

AN IMPULSE TURBINE GENERALLY USES THE VELOCITY OF THE WATER TO MOVE THE CRANK AND DISCHARGES AT ATMOSPHERIC PRESSURE. A WATER STREAM HITS EACH BLADE ON THE CRANK. WITH NO SUCTION ON THE OTHER SIDE OF THE TURBINE, THE WATER FLOWS OUT TO THE OTHER SIDE OF THE TURBINE HOUSING AFTER HITTING THE BLADE. AN IMPULSE TURBINE IS GENERALLY SUITABLE FOR HIGH-HEAD, LOW-FLOW APPLICATIONS.

THIS SIMPLY IMPLIES THAT RATHER THAN MOVING AS A CONSEQUENCE OF A REACTION FORCE, WATER CAUSES THE TURBINE TO MOVE BY CREATING AN IMPULSE.

WORKING PRINCIPLE

- According to Newton's second law of shifting, the detachments that occur during the movement of the liquid depend on two characteristics: the mass of the liquid penetrating the turbine and the difference in the acceleration of the liquid between the inlet and outlet of the turbine.

- An impulse turbine has the ability to take all kinetic energy from water for high efficiency. When the water reaches the engine, it is released into the conditions from the footing of the turbine accommodation; Therefore, there is no dust at the bottom of the turbine.

- The turbine model consists of six blades that are attached to the crank.
- Turbine rotates freely with blades with the help of force provided by the flowing water of river.
- Starting from bottom most point of the turbine and making clockwise rotation, blades rotate from 0° to 90° in the first quarter of one full revolution of the turbine, then rotates back from 90° to 0° in the second quarter.
- For the first half of a revolution, blade is functional and in the other half, it remains static.

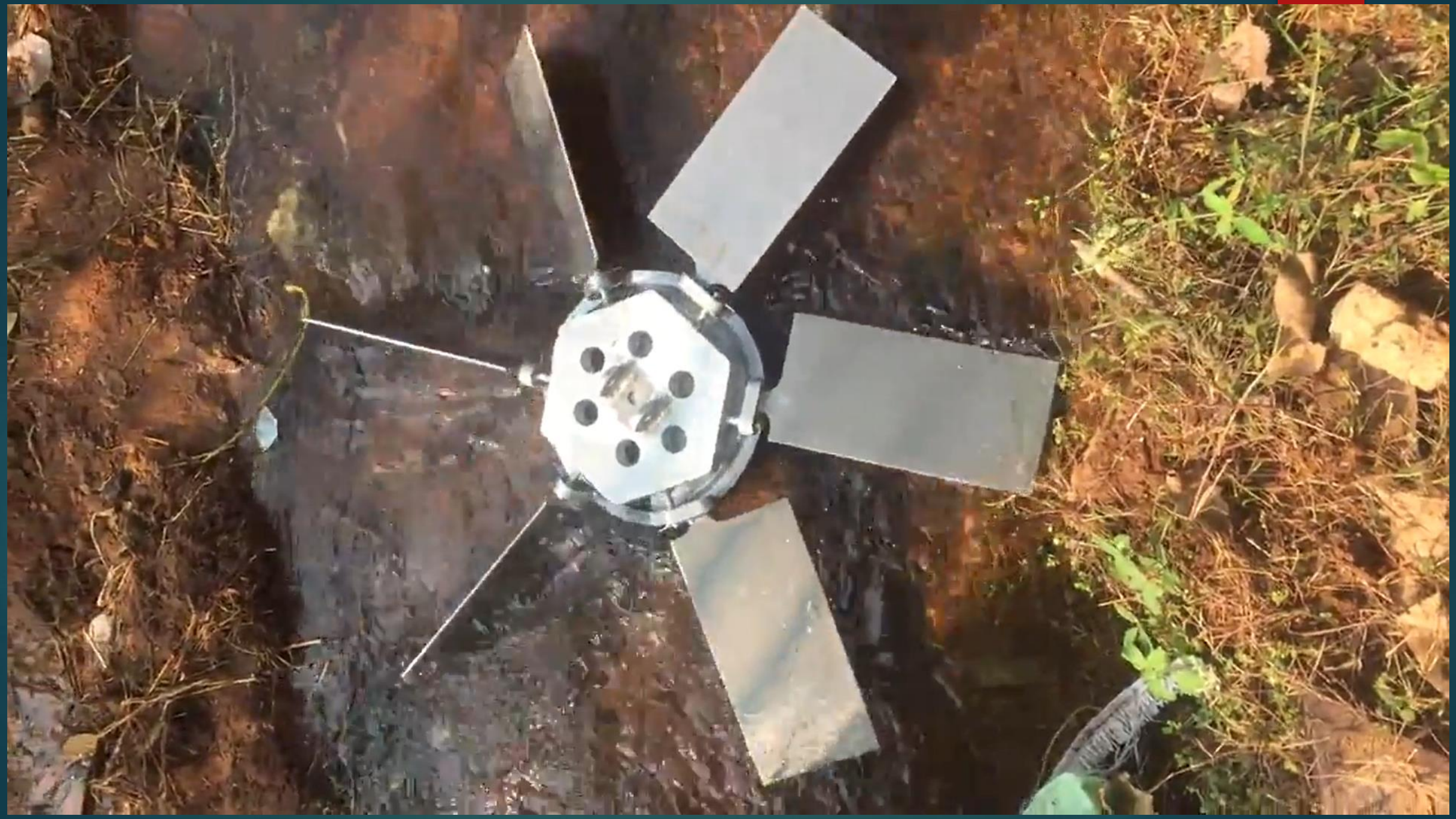

MATHEMATICAL MODEL

The power $'\mathbf{P}'$ is the product of force $'\mathbf{F}'$ and the velocity $'\mathbf{V}'$.

- $\mathbf{P = F \times V}$ ------- (1)

Equation 2 gives the forces acting in a single wing for the 360^0 of rotation. The working of the turbine is modelled as an as a piece-wise function which depends on the following factors:

$\mathbf{F_D}$ = Drag force is acting,

$\mathbf{F_F}$ = Frictional force between the radial and end cam,

$\mathbf{F_{IW}}$ = Inertial force of wing in the transition,

$\mathbf{F_{IR}}$ = Inertial force of rotor, and

$\mathbf{F_{WHD}}$ = Frictional force against water

- $$\mathbf{F = \beta\,(F_D - F_{IW}) - (1-\beta)(F_F + F_{WHD}) - F_{IR}} \begin{cases} \boldsymbol{\beta = 0,\ \text{for } \phi\ 180^0 \text{ to } 360^0} \\ \boldsymbol{\beta = 1,\ \text{for } \phi\ 0^0 \text{ to } 180^0} \end{cases}$$ ------- (2)

Equation 1:

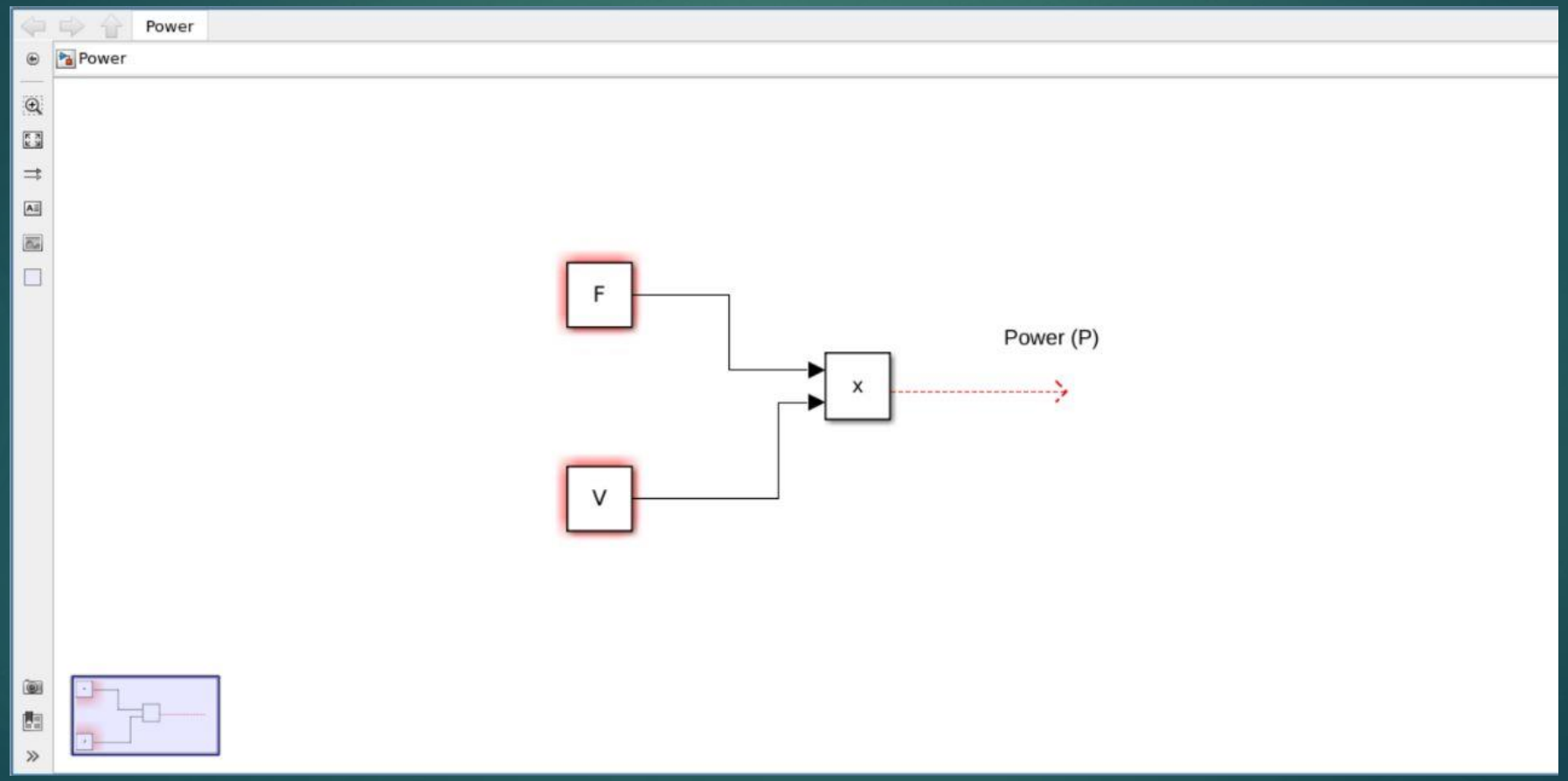

Equation 2:

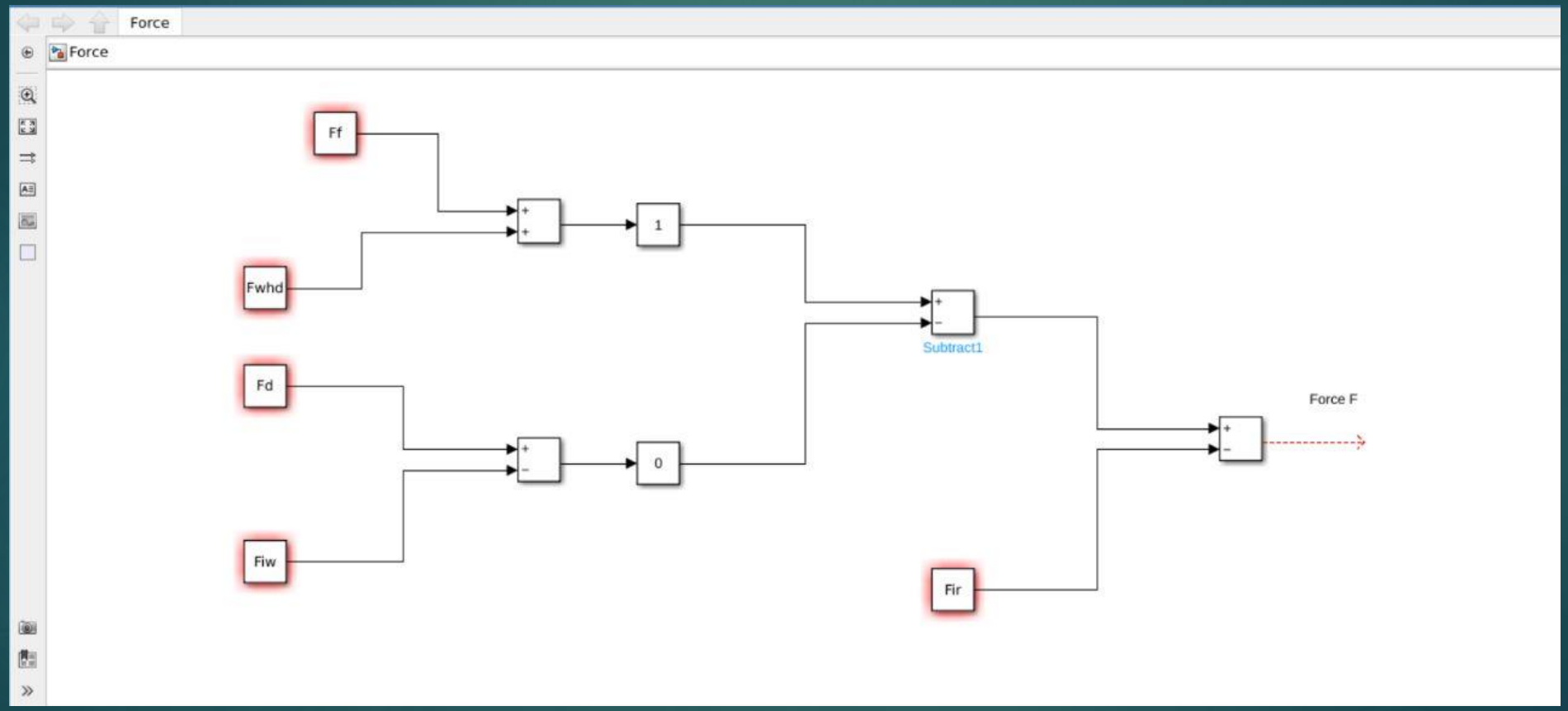

Drag Force, F_D is the force created due to the interaction of the fluid with wings. The drag force changes instantaneously because of the continuous change in the frontal area of the wing as it moves from Ø 0° to 180°. This effect is captured in the model as the wing has to undergo both rotations to Ø and Θ in equation 4, so both the rotation has to be considered in the actual wing for its mathematical model. The Ø is the turbine axis and the Θ the wing axis as per which the mathematical model is derived:

- **Drag Force** $(F_D) = \frac{1}{2}\rho v^2 A C_d$ ------- **(3)**

ρ = Density of fluid,

v = Velocity of the fluid,

C_d = Drag Coefficient, and

A = Frontal Area

Equation 3:

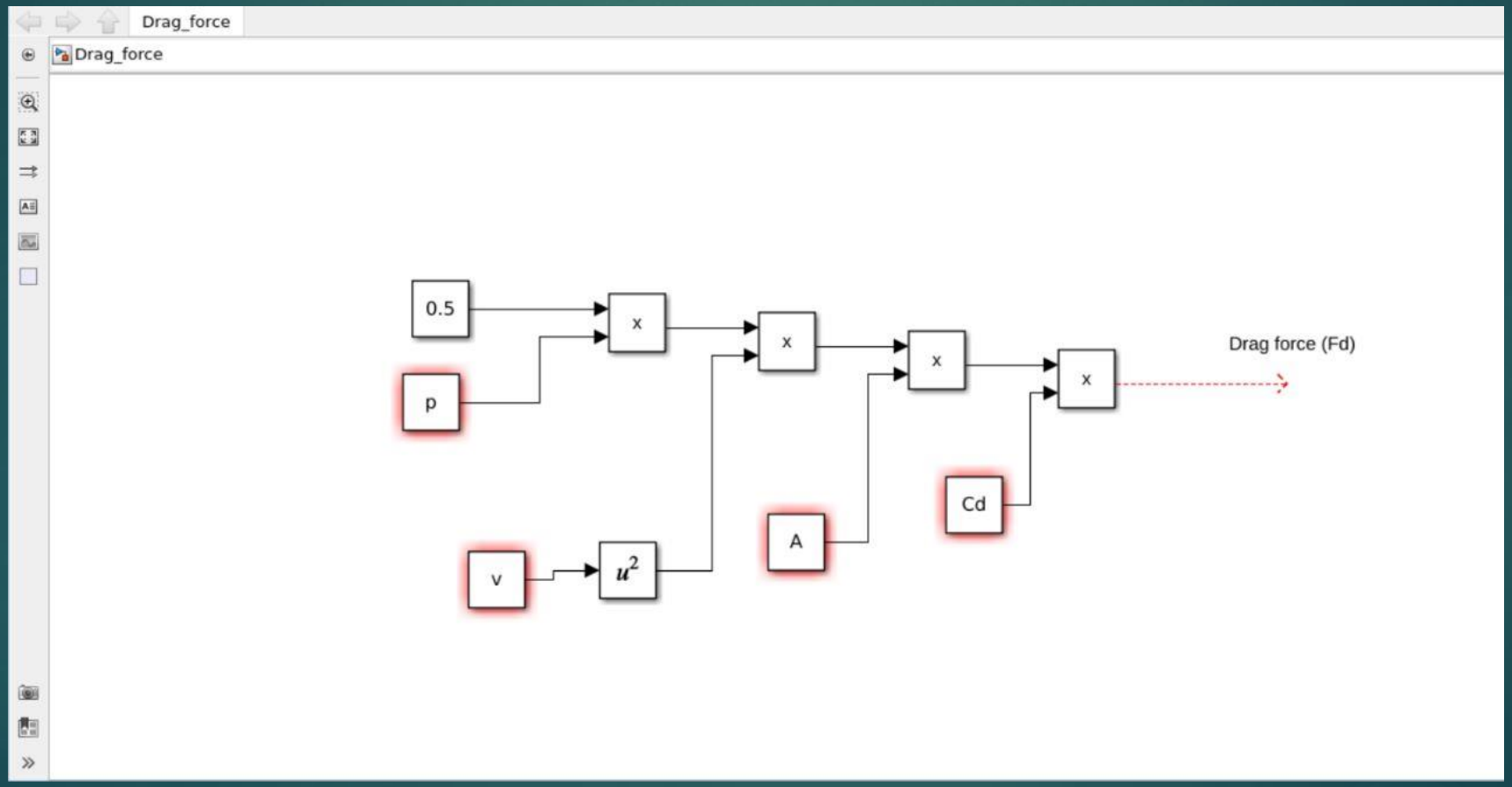

The component $b \times (l \times \cos\phi)$ in the equation predicts the change in the frontal area as the wing moves to the $\emptyset$ or the turbine axis moves from $\emptyset$ 0° to 180°. Also, the component $l \times b \times (1 - \cos\pi\frac{\phi}{\theta})$ in the equation predicts the change in frontal area as the wing moves to the θ as the cam slides down the stator.

- $$\mathbf{A = b \times (l \times \cos\phi) + l \times b \times (1 - \cos\pi\frac{\phi}{\theta})} \qquad \text{------- (4)}$$

Frictional Force is the force developed due to friction end cam and radial cam interaction. This depends on:

W_c = weight of cam, and

W_w = weight of wing

- $$\mathbf{Frictional\ Force\ (F_F) = \mu N = \mu(W_c + W_w)} \qquad \text{------- (5)}$$

Equation 4:

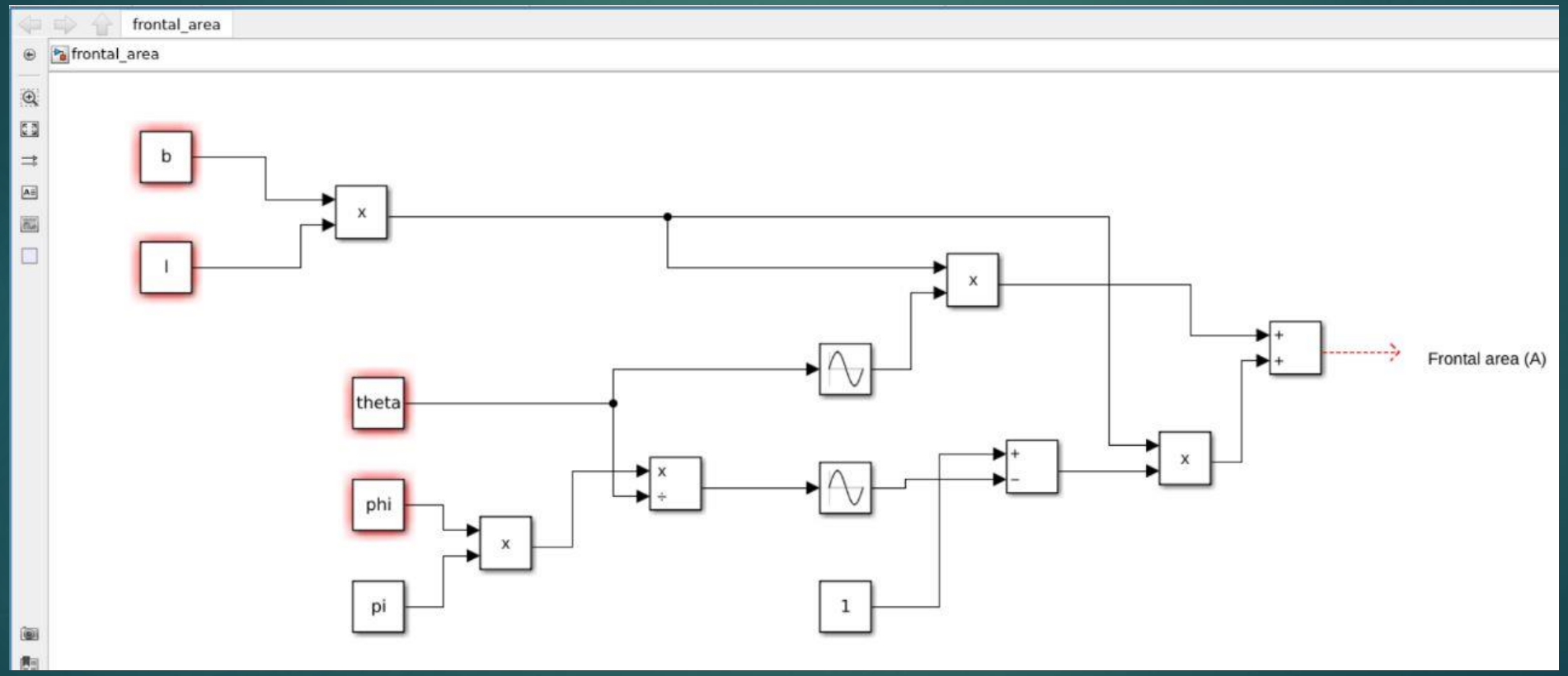
frontal_area
frontal_area
b
l
x
theta
phi
pi
x
x
x
x
1
Frontal area (A)

Equation 5:

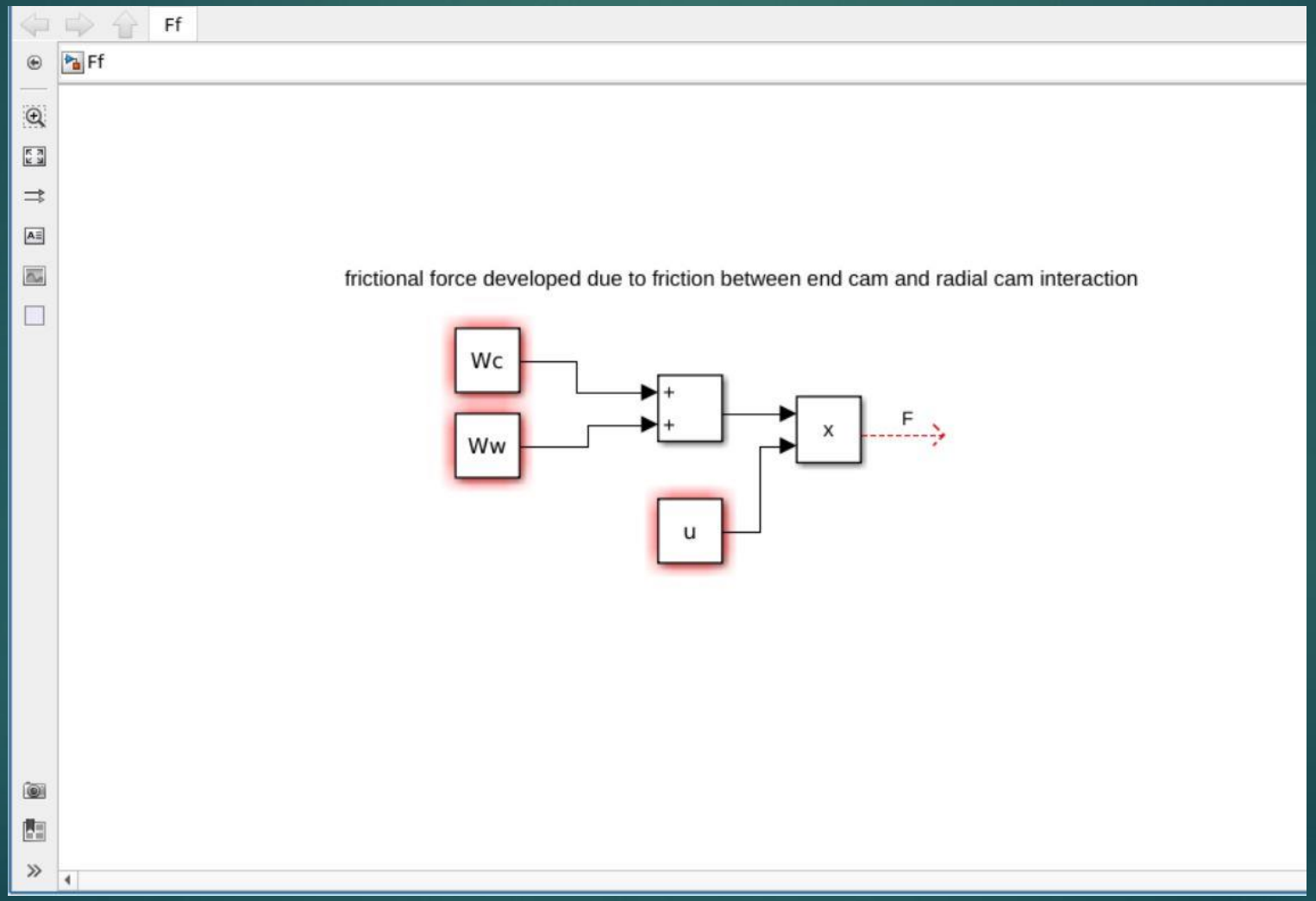
Ff
Ff
frictional force developed due to friction between end cam and radial cam interaction
Wc
Ww
+
+
x
F
u

The inertia of wing is the resistance applied by the wing during its interaction with the end of the end cam as it re-orients itself from vertical position to horizontal position.

- **Wing rotational Inertia (F_{IW}) = $\frac{I\alpha_w}{r_w}$** ------- **(6)**

r-Cam Radius,

I = Inertia of the wing and cam assembly, and

$\alpha = \frac{a}{r}$: rotational acceleration

Inertia of rotor '$\mathbf{F_{IR}}$' is the inertia of the rotor that has to be considered which depends on the profile and the mass of the rotor and the '$\mathbf{F_{WHD}}$' which is the drag on the horizontal wings which is insignificant and can be neglected.

Equation 6:

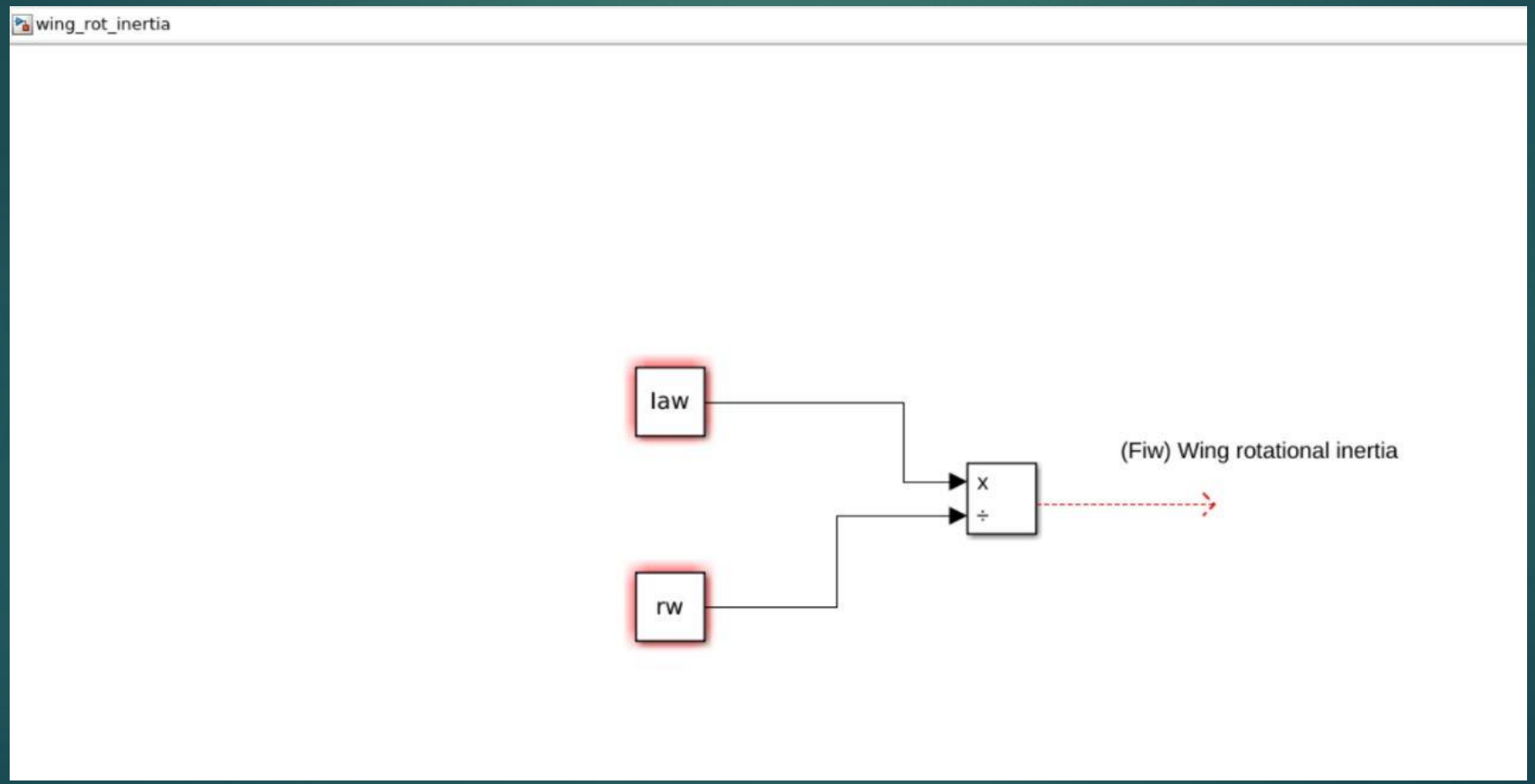

GIVEN VALUES

- Velocity of rotor, $V = 4$ rpm
- Density of fluid, $\rho_w = 1000$ kg/m^3
- Velocity of fluid, $v = 1.6$ m/s
- Drag coefficient, $C_d = 1.3$
- Length of the wing, $L = 0.35$ m
- Breadth of the wing, $B = 0.15$ m
- Frictional coefficient, $\mu = 0.3$
- Weight of cam, $W_c = 75$ grams
- Weight of wing, $W_w = 250$ grams
- Cam radius, $r_w = 4$ cm

CALCULATED VALUES

Θ (radians)	Φ (radians)	Area (m^2)	F_d (N)	F (N)	P (W)
π	π/2	0.0525	8.7098	87	36.54
π/2	π/4	0.9	149	148.911	62.4

3D MODEL

The following model has been analysed and designed using ***Fusion 360***, a computer aided design software.

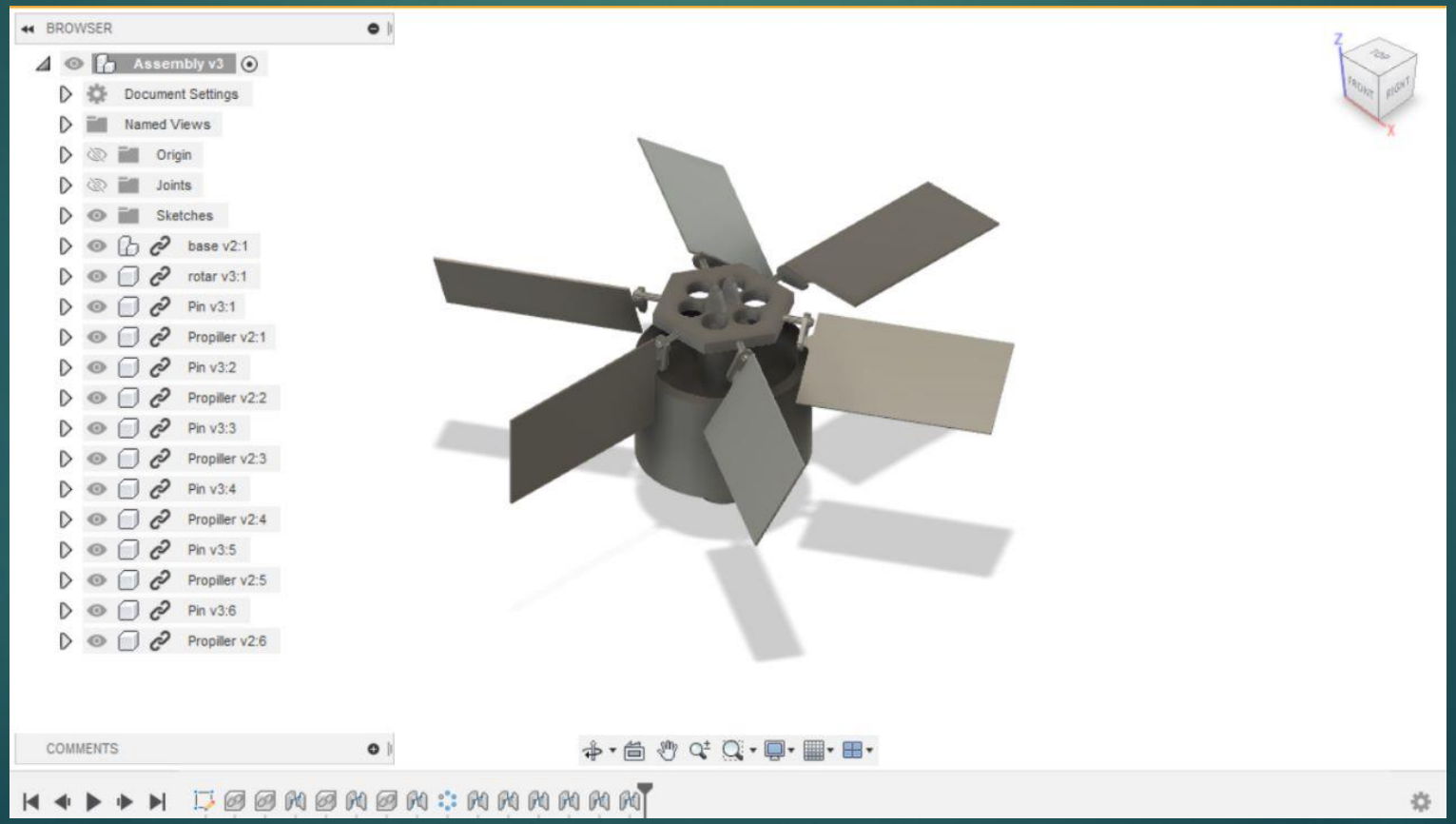

Safety Factor (Per Body)

0 8

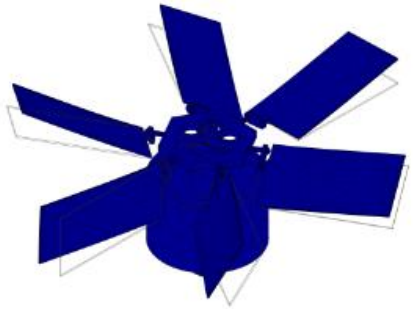

Stress

Von Mises

[MPa] 0 1.128

1st Principal

[MPa] -0.236 1.376

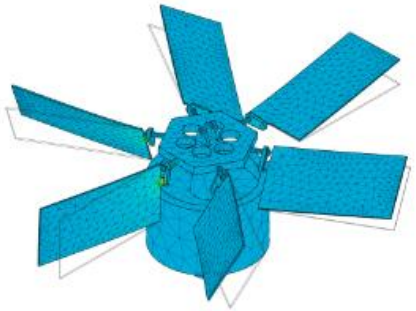

3rd Principal

[MPa] -1.3 0.295

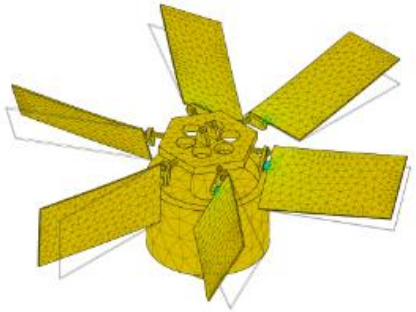

⊟ Displacement

⊟ Total

[mm] 0 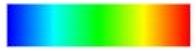 0.05356

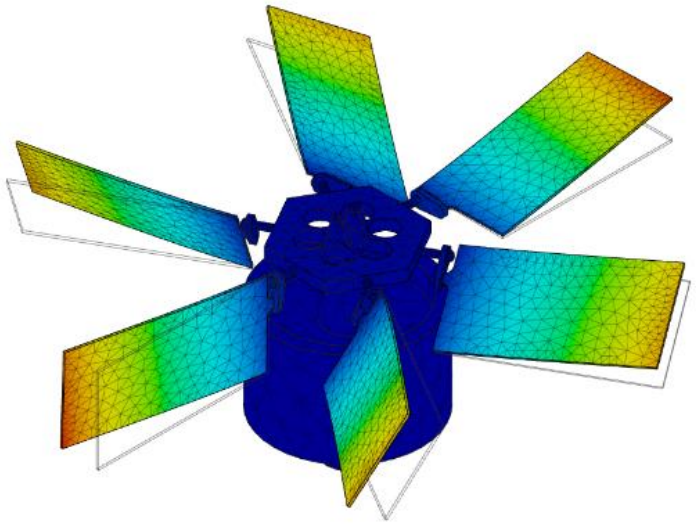

Mode 1: 7.081 Hz Total Modal Displacement

0 1

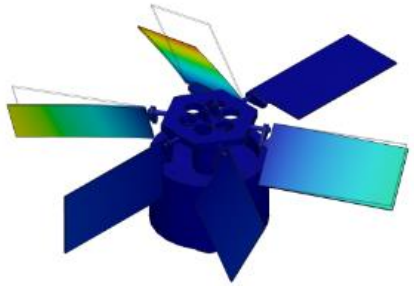

Mode 2: 7.084 Hz Total Modal Displacement

0 1

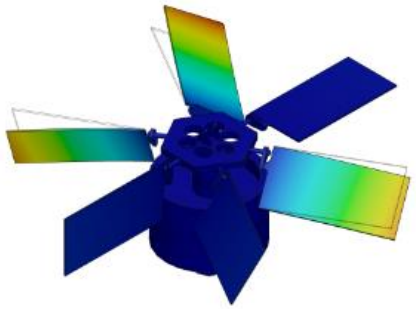

Mode 3: 7.178 Hz Total Modal Displacement

0 1

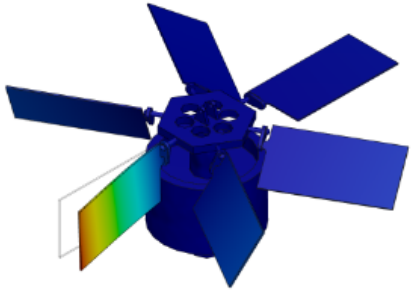

Mode 4: 7.206 Hz Total Modal Displacement

0 1

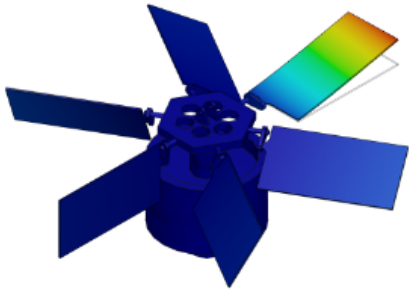

Mode 5: 7.215 Hz Total Modal Displacement

0 1

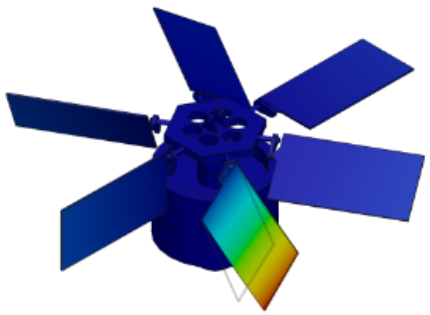

Mode 6: 12.2 Hz Total Modal Displacement

0 1

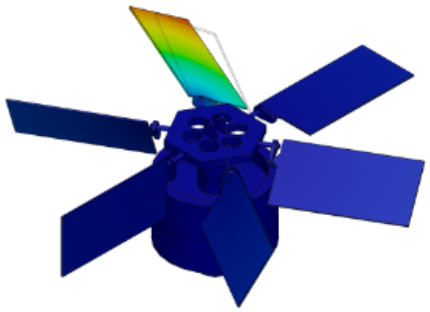

Mode 7: 12.36 Hz Total Modal Displacement

0 1

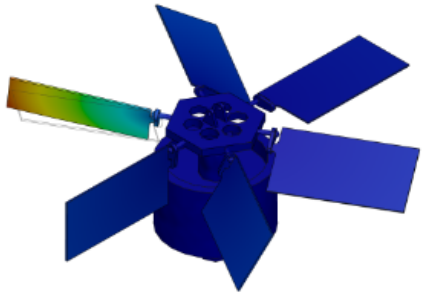

Mode 8: 12.48 Hz Total Modal Displacement

0 1

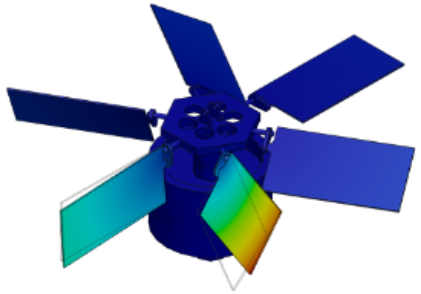

THANK YOU!